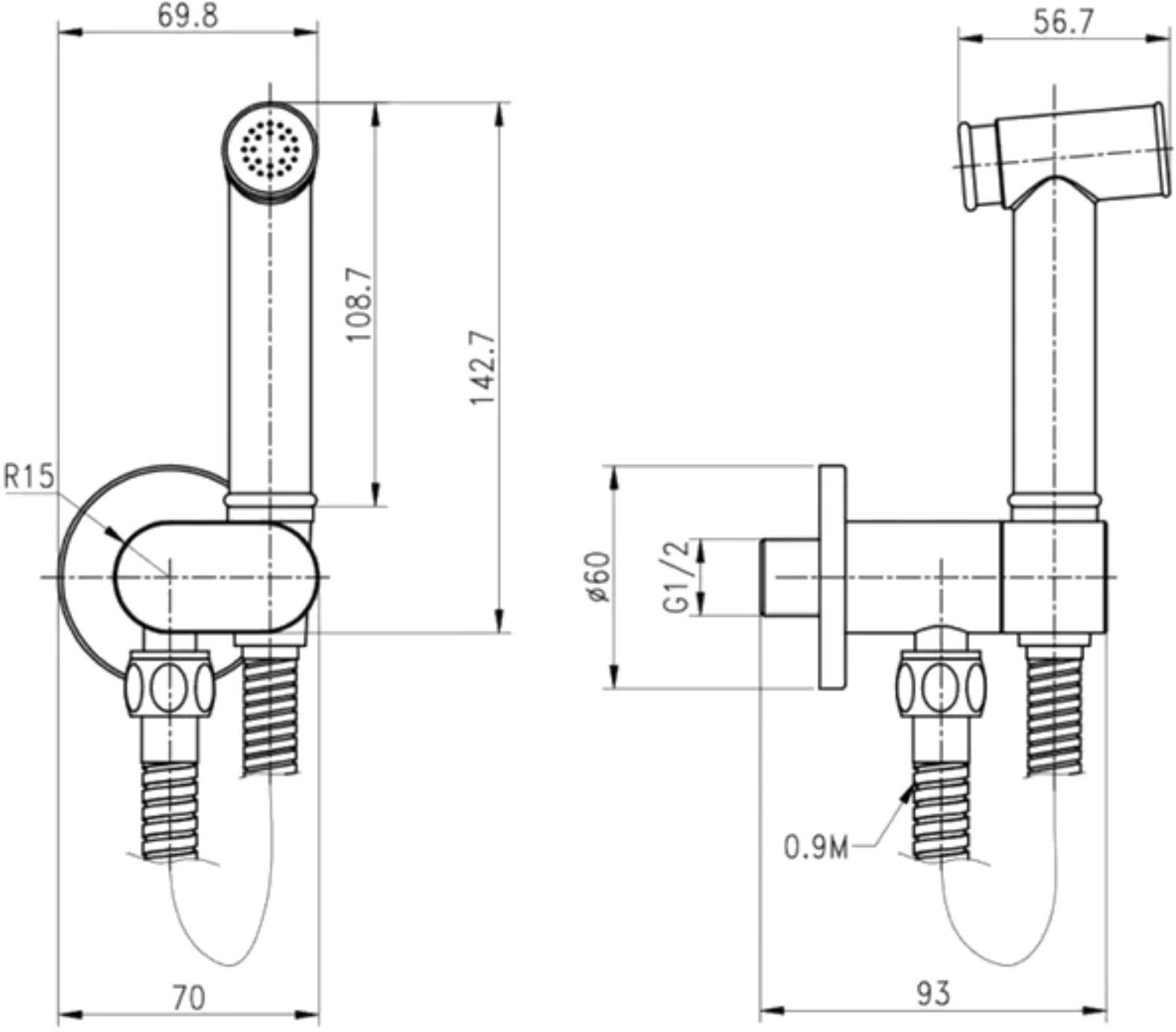
69.8
108.7
142.7
R15
70
56.7
ø60
G1/2
0.9M
93